Technical specification sheet

SR80/28-50 | Stacking Ring

Specifications		
article number		101.001.624
model		SR80/28-50
suitable for jack		HATC 80/28
short description		Stacking Ring
weight, ready for use	lb	1.3
dimensions (AxBxC)	in	2 x 7 x 4.6

Technical drawing dimensions		
dimension A	in	2
dimension B	in	7
dimension C	in	4.6

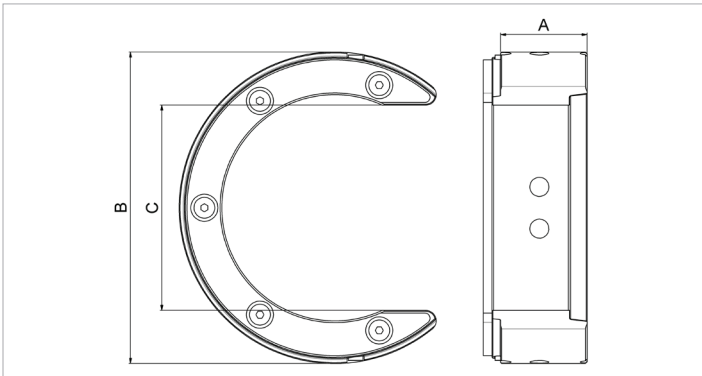

holmatro.com

© Holmatro 2021-07-01
While the greatest care has been devoted to the content, it is possible that the information in this printed matter is incorrect or incomplete. Holmatro B.V. and its affiliated companies (hereafter: Holmatro) cannot be held liable in any way for the consequences of activities undertaken on the basis of this printed matter. Values can vary within the manufacturer measurements. If you have any doubts about the correctness or completeness of the information, you shall contact Holmatro (T +31 (0)162-751480). Nothing from this printed matter can be copied and/or made public in any way without the explicit authorisation of Holmatro.