Technical specification sheet

ICU10A40 Straight Blade | Mobile Cutter

Specifications		
article number		178.012.004
model		ICU10A40 Straight Blade
blade type		40 straight
cutter type		mobile
short description		Mobile Cutter
max. working pressure	bar/Mpa	500 / 50
max. spreading opening	mm	305
max. cutting opening	mm	296
max. spreading force	kN/t	92 / 9.4
max. cutting force	kN/t	264 / 26.9
required oil content (effective)	cc	84
weight, ready for use	kg	15.4
dimensions (LxWxH)	mm	739 x 230 x 177
temperature range	°C	-20 + 80

Accessories	
Balancer, 15 - 20 kg	130.182.039

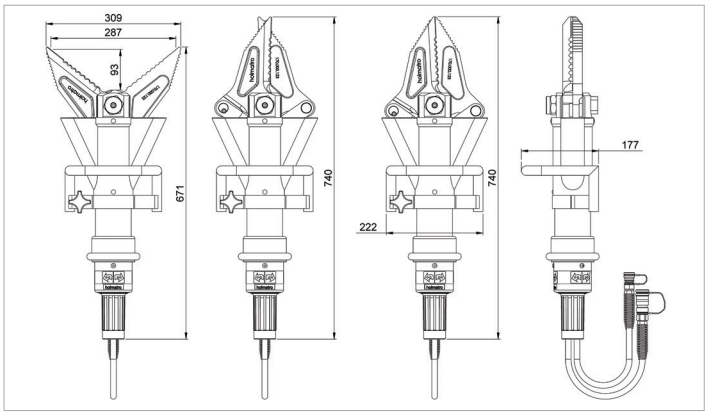

holmatro.com

© Holmatro 2021-09-03
While the greatest care has been devoted to the content, it is possible that the information in this printed matter is incorrect or incomplete. Holmatro B.V. and its affiliated companies (hereafter: Holmatro) cannot be held liable in any way for the consequences of activities undertaken on the basis of this printed matter. Values can vary within the manufacturer measurements. If you have any doubts about the correctness or completeness of the information, you shall contact Holmatro (T +31 (0)162-751480). Nothing from this printed matter can be copied and/or made public in any way without the explicit authorisation of Holmatro.