Holmatro
V-Strut

holmatro
mastering **power**

About **Holmatro**

For nearly half a century, Holmatro has been developing, producing and testing high-pressure hydraulic equipment for industrial, rescue and tactical applications. Based on the needs of users, our products are known for their high quality and innovative technology. Holmatro sells and services these products through an extensive global dealer network.

When it comes to Holmatro rescue equipment, our highly experienced engineers translate innovative ideas into lighter, more powerful solutions. The result is a full range of high-quality products that enable you to work efficiently under pressure. With Holmatro it's safer, easier and quicker to save lives.

Holmatro products are made at our state-of-the-art production facilities located in the Netherlands and USA. Innovation, quality and service are at the heart of our company philosophy. With sound design, precision manufacturing, an unrivaled attention to detail and a service and maintenance network unmatched anywhere else, Holmatro products last for years. That's why they're the tools of choice for rescue workers throughout the world. Once you use them, you'll use them for life.

Holmatro V-Strut

The V-strut is designed to stabilize cars quickly, easily and safely. Incorporating an integrated head, slip resistant base plate and tensioning belt with hook and ratchet mechanism, this all-in-one tool is ready for immediate use.

Although the V-Strut has a high load capacity of 16 kN (3597 lbf), it weighs just 7.2 kg (15.9 lb). This means it's easy to carry and handle. The auto-lock system enables you to set it up in no time. Simply extend it to the required length and it locks automatically. With locking steps every 30 mm (1.18 in), accurate positioning is easy, whether the car is on its side or roof.

You can count on us, for life

holmatro
mastering **power**

Holmatro V-Strut: The lightweight tool for rapid, safe stabilization

- Vehicle stabilization strut with integrated head, base plate and tensioning belt with hook and ratchet mechanism
- All-in-one solution
- No loose parts
- Rapid deployment for set-up in as little as 15 seconds

Unique auto-lock system

- Easily extend and lock with one movement
- No release or unlocking required to extend
- Automatically locks in place
- Locking points at small intervals
- Enables accurate positioning at many lengths
- Quick, easy and safe

Squeeze and push mechanism

- To release the strut quickly and easily after use

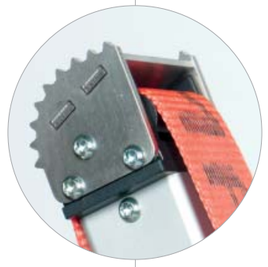

Extremely lightweight

- Easy to carry
- Easy to work with
- Weighs just 7.2 kg (15.9 lb)

Serrated, multi-purpose head

- For optimal grip
- Suitable for use on many vehicle surfaces

Tensioning belt

- Tensioning belt with hook and ratchet mechanism
- For quick and easy attachment to the car
- Enables the rapid creation of a stable triangle

Snap hook

- For fast and easy detachment and reattachment

Reel for tensioning belt

- Prevents tangling of tensioning belt
- For compact storage

High shoring capacity

- Up to 16 kN (3597 lbf) axial load
- Enough to stabilize most cars

Base plate with slip resistant profile

- For optimal grip on a variety of surfaces

Heat resistant cover

- Slideable, heat-resistant protection cover around tensioning belt
- Protects the belt against hot exhausts

Optional accessories

- Sheet metal knife:
  Suitable for quick and easy creation of a fixing point in the car's hood, roof or trunk
- Holmatro PowerShore™ base support plate for use on soft soil, which prevents the strut from sinking into the ground

Technical data V-Strut

article number	150.062.194
max. axial load (see F in drawing below)	16 kN | 3,597 lbf
closed length	1080 mm | 42.52 in
number of stroke steps	24
stroke step size	30 mm | 1.18 in
total stroke	720 mm | 28.35 in
extended length	1800 mm | 70.87 in
weight	7.2 kg | 15.9 lbs
dimensions (LxWxH)	1080 x 149 x 210 mm 42.52 x 5.87 x 8.27 in
length tensioning belt	5 m | 16.4 ft

Accessories V-Strut

sheet metal knife	150.062.183
base support plate	150.011.519

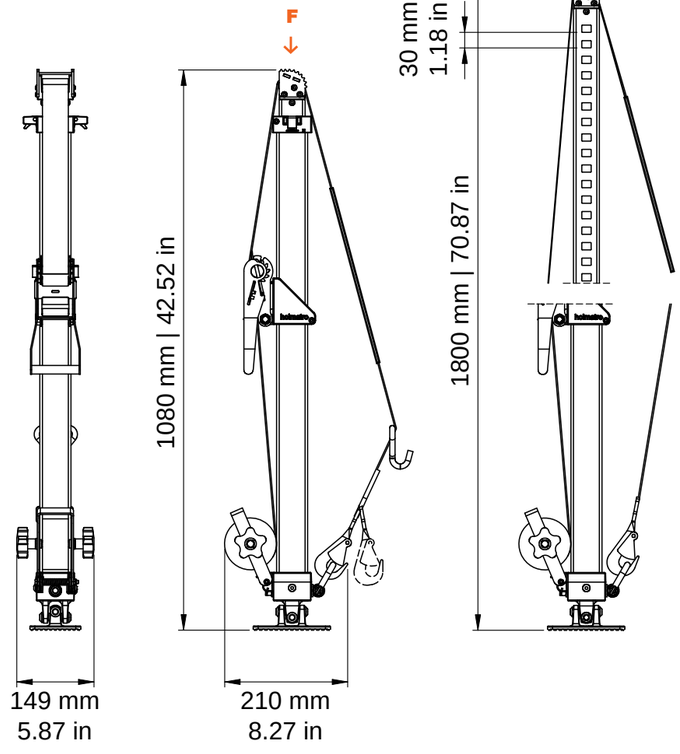

Holmatro USA
Manufacturing, sales & service
505 McCormick Drive
Glen Burnie, MD, 21061
tel: 410-768-9662
fax: 410-768-4878

Holmatro Group
World Headquarters
Raamsdonksveer, The Netherlands

Holmatro Netherlands
Rescue equipment
Raamsdonksveer, The Netherlands
Manufacturing, sales & service

Holmatro UK
Nottingham, UK
Sales & service

Holmatro China
Suzhou, Jiangsu Province, China
Sales & service

Holmatro Poland
Warsaw, Poland
Sales & service

www.holmatro-usa.com

© Holmatro® 2012 - 0113 Technical modifications reserved.